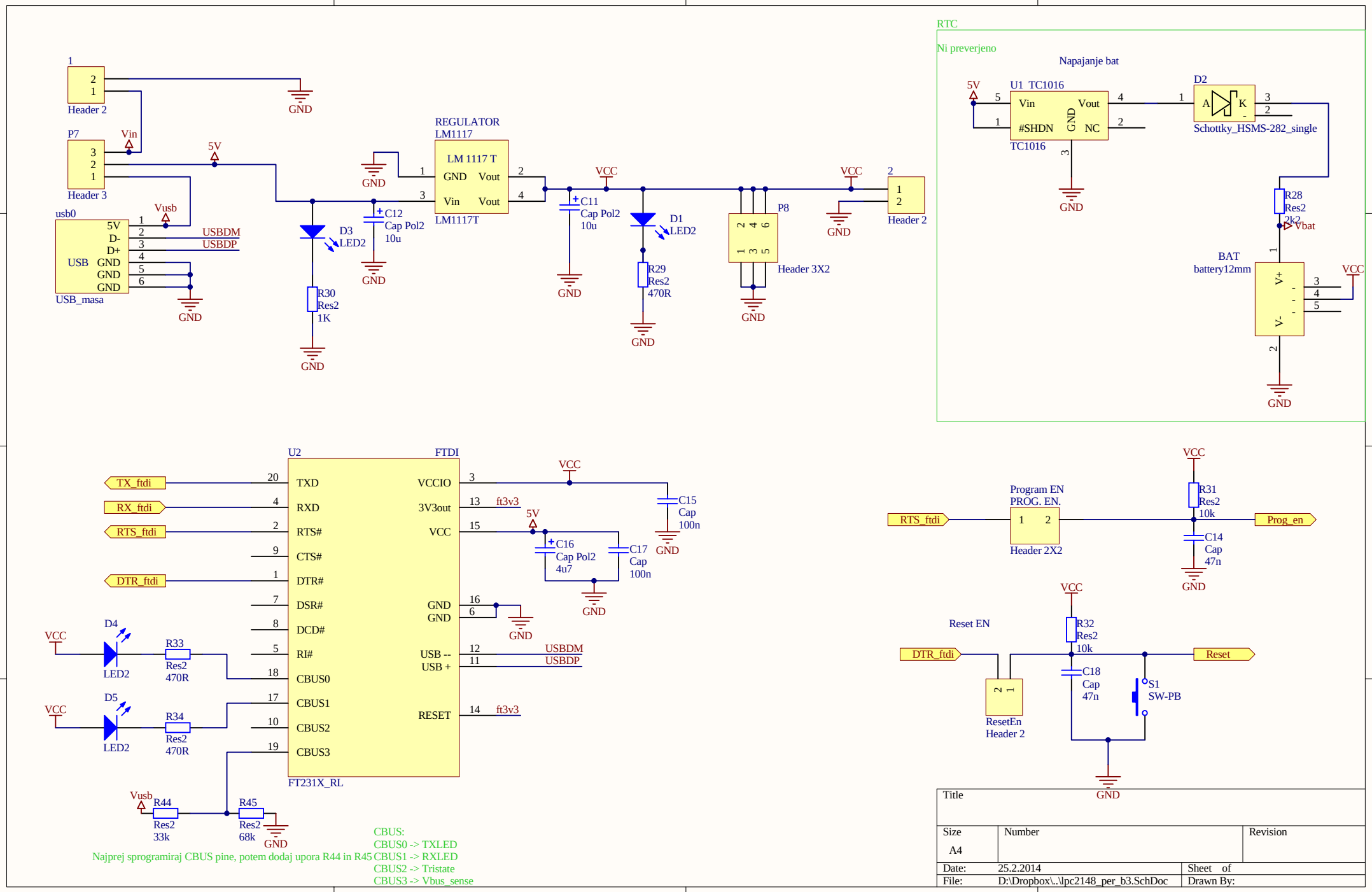
RTC
Ni preverjeno
Napajanje bat
U1 TC1016
Vin
Vout
#SHDN
GND
NC
TC1016
D2
Schottky_HSMS-282_single
R28
Res2
2k2
Vbat
BAT
battery12mm
V+
V-
Header 2
P7
Header 3
Vin
5V
usb0
USB
USB_masa
Vusb
USBDM
USBDP
D3
LED2
R30
Res2
1K
C12
Cap Pol2
10u
REGULATOR
LM1117
LM 1117 T
LM1117T
C11
Cap Pol2
10u
D1
LED2
R29
Res2
470R
P8
Header 3X2
VCC
GND
U2
FTDI
TX_ftdi
RX_ftdi
RTS_ftdi
DTR_ftdi
TXD
RXD
RTS#
CTS#
DTR#
DSR#
DCD#
RI#
CBUS0
CBUS1
CBUS2
CBUS3
VCCIO
3V3out
VCC
GND
GND
USB --
USB +
RESET
ft3v3
C15
Cap
100n
C16
Cap Pol2
4u7
C17
Cap
100n
D4
LED2
R33
Res2
470R
D5
LED2
R34
Res2
470R
R44
Res2
33k
R45
Res2
68k
FT231X_RL
Najprej sprogramiraj CBUS pine, potem dodaj upora R44 in R45
CBUS:
CBUS0 -> TXLED
CBUS1 -> RXLED
CBUS2 -> Tristate
CBUS3 -> Vbus_sense
Program EN
PROG. EN.
Header 2X2
R31
Res2
10k
C14
Cap
47n
Prog_en
Reset EN
R32
Res2
10k
C18
Cap
47n
S1
SW-PB
Reset
ResetEn
Header 2
Title
Size
A4
Number
Revision
Date:
25.2.2014
Sheet of
File:
D:\Dropbox\..\lpc2148_per_b3.SchDoc
Drawn By: