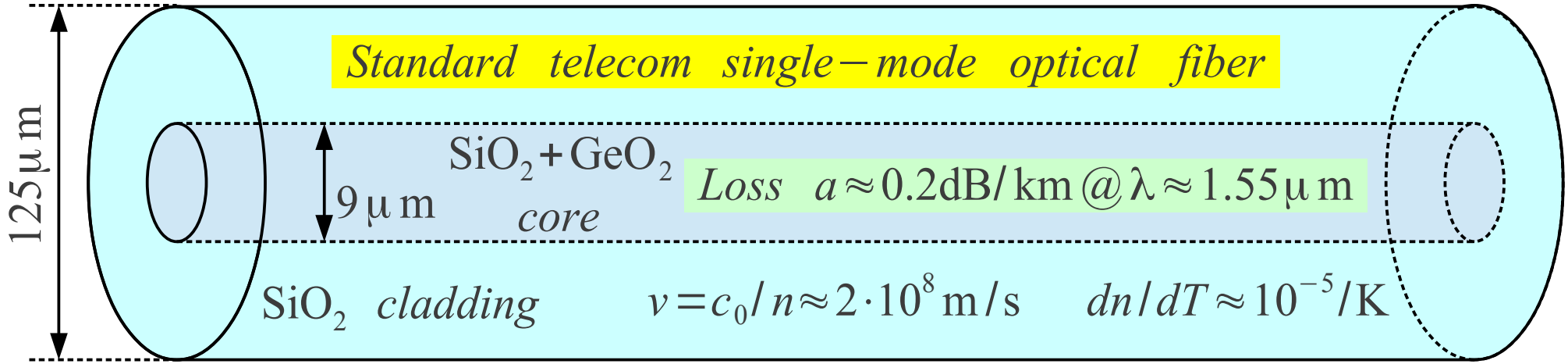
Standard telecom single−mode optical fiber
125 μm
9 μm
SiO2 + GeO2
core
Loss a ≈ 0.2dB/km @ λ ≈ 1.55 μm
SiO2 cladding
v = c0/n ≈ 2·10^8 m/s
dn/dT ≈ 10^−5/K

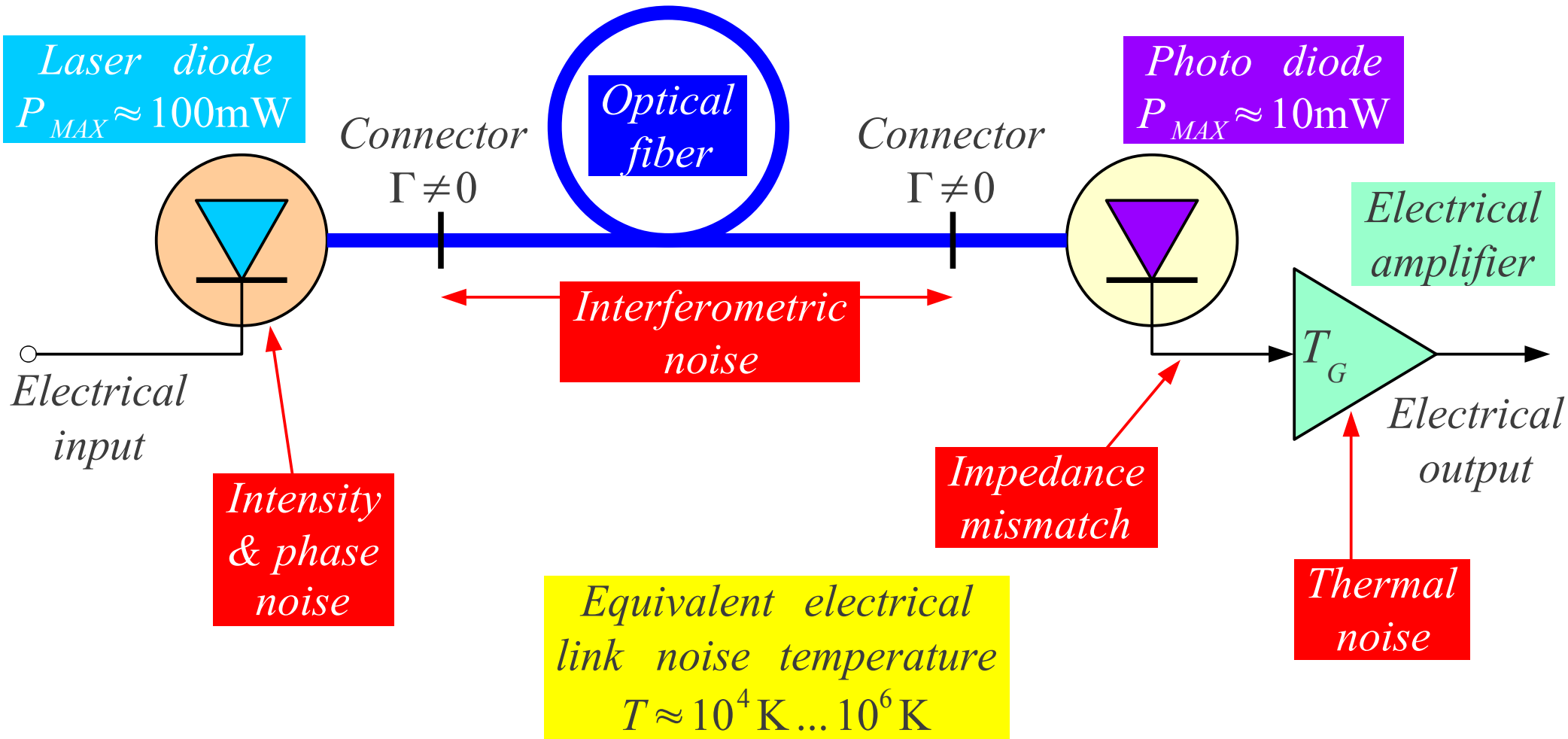
Laser diode
P MAX ≈ 100mW
Connector
Γ ≠ 0
Optical fiber
Connector
Γ ≠ 0
Photo diode
P MAX ≈ 10mW
Electrical amplifier
Interferometric noise
T G
Electrical input
Electrical output
Intensity & phase noise
Impedance mismatch
Thermal noise
Equivalent electrical link noise temperature
T ≈ 10^4 K ... 10^6 K