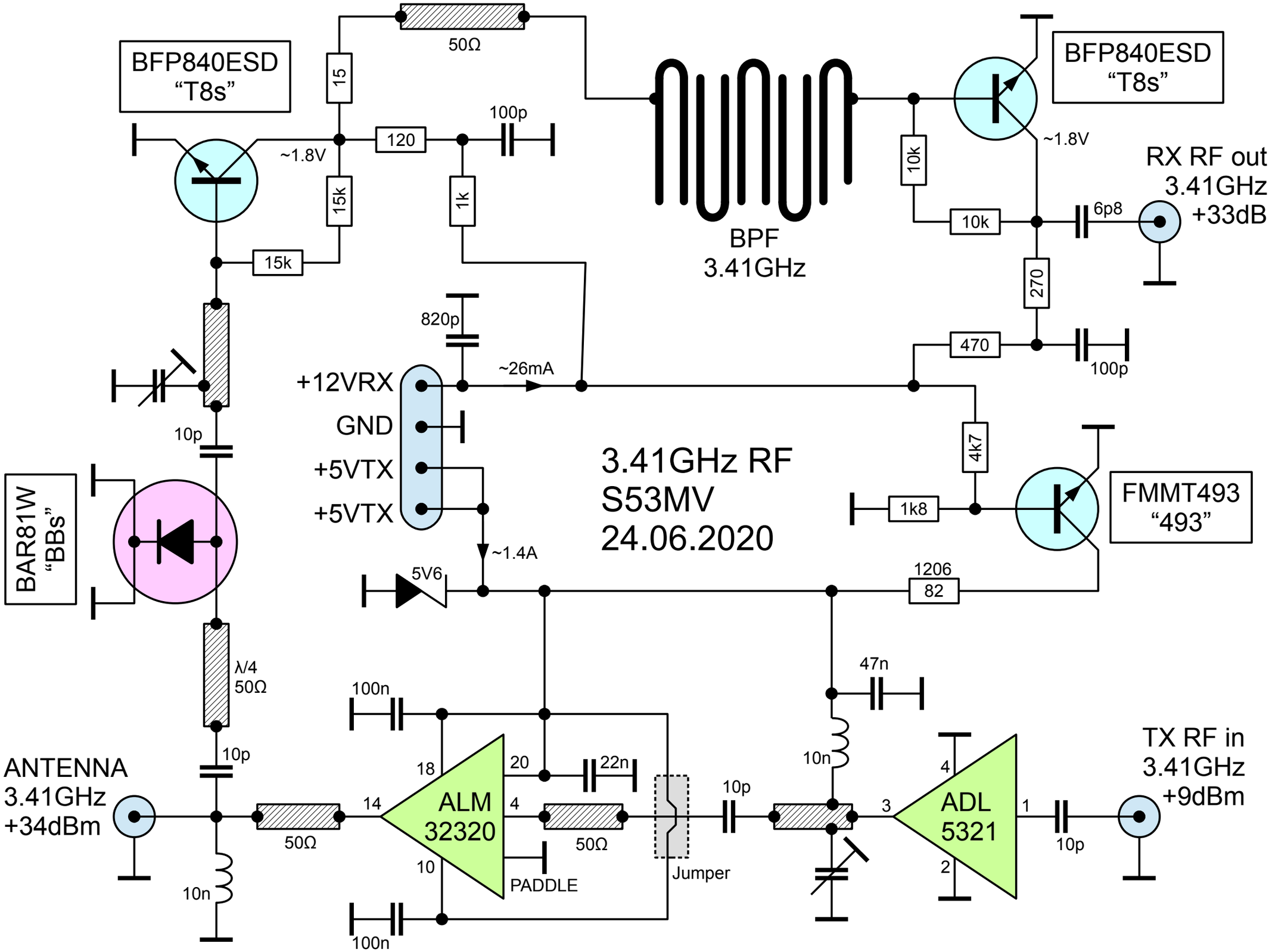
BFP840ESD
"T8s"
50Ω
15
~1.8V
120
100p
15k
1k
15k
BPF
3.41GHz
BFP840ESD
"T8s"
~1.8V
10k
10k
6p8
RX RF out
3.41GHz
+33dB
270
470
100p
820p
~26mA
+12VRX
GND
+5VTX
+5VTX
10p
3.41GHz RF
S53MV
24.06.2020
4k7
1k8
FMMT493
"493"
BAR81W
"BBs"
~1.4A
5V6
1206
82
λ/4
50Ω
47n
100n
10p
10n
ANTENNA
3.41GHz
+34dBm
18
20
22n
14
ALM
32320
4
50Ω
50Ω
10
PADDLE
Jumper
10p
3
ADL
5321
4
1
2
10p
TX RF in
3.41GHz
+9dBm
10n
100n