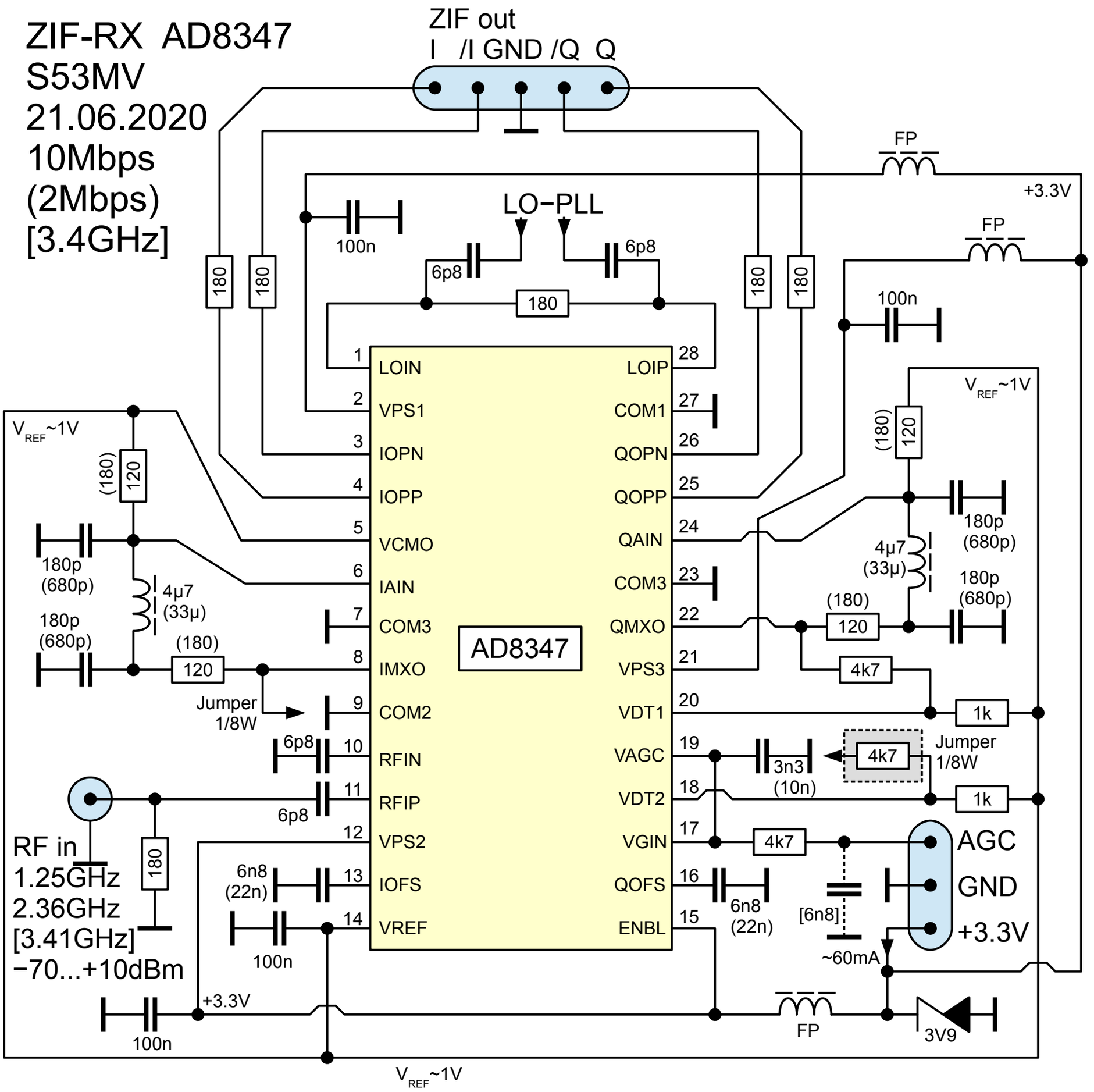
ZIF-RX AD8347
S53MV
21.06.2020
10Mbps
(2Mbps)
[3.4GHz]
ZIF out
I /I GND /Q Q
FP
+3.3V
LO−PLL
100n
6p8
6p8
180
180
180
180
180
100n
AD8347
LOIN
VPS1
IOPN
IOPP
VCMO
IAIN
COM3
IMXO
COM2
RFIN
RFIP
VPS2
IOFS
VREF
LOIP
COM1
QOPN
QOPP
QAIN
COM3
QMXO
VPS3
VDT1
VAGC
VDT2
VGIN
QOFS
ENBL
VREF~1V
(180)
120
180p
(680p)
4µ7
(33µ)
Jumper
1/8W
6p8
RF in
1.25GHz
2.36GHz
[3.41GHz]
−70...+10dBm
6n8
(22n)
100n
+3.3V
4k7
1k
3n3
(10n)
[6n8]
~60mA
AGC
GND
+3.3V
3V9