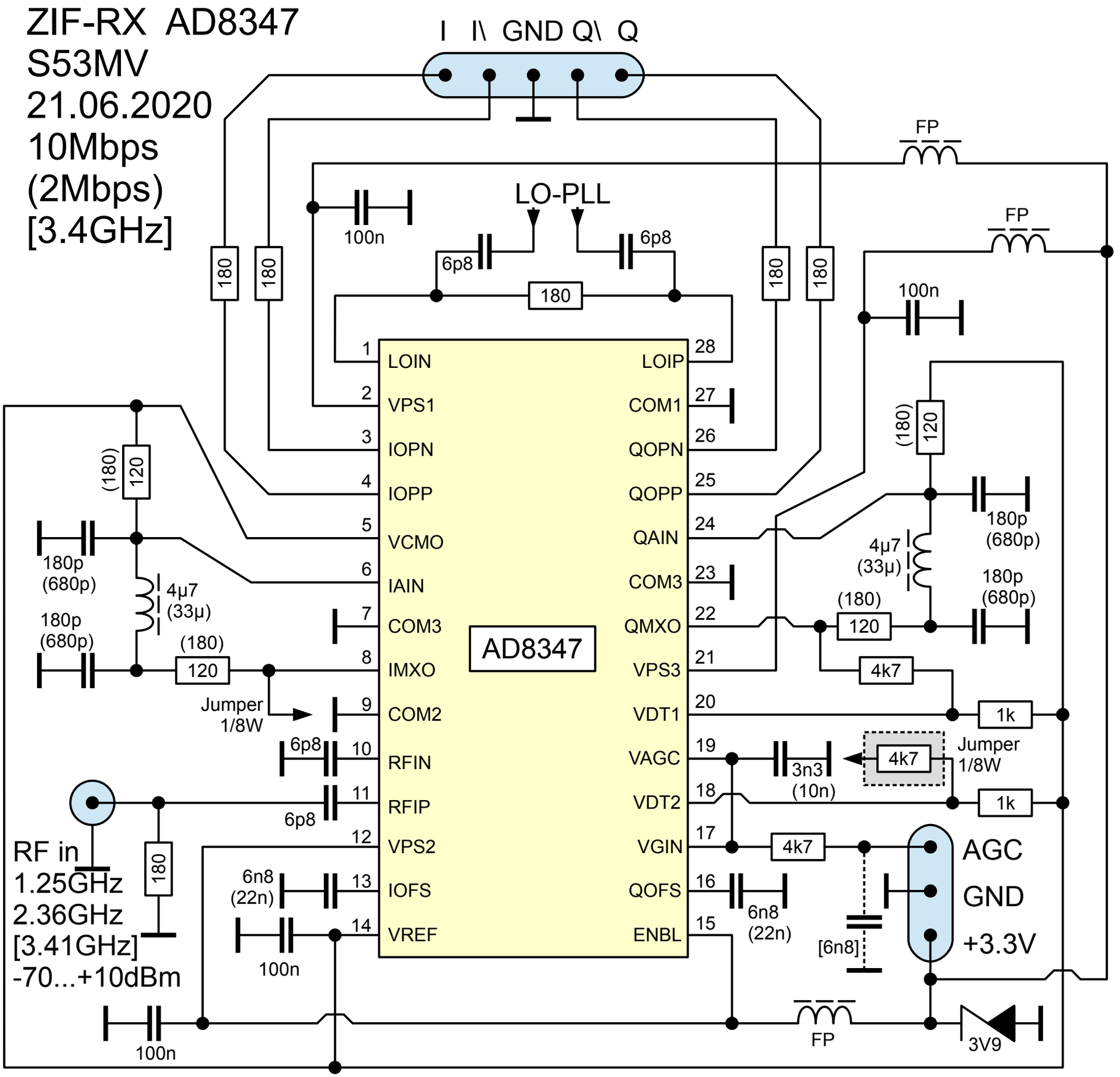
ZIF-RX AD8347
S53MV
21.06.2020
10Mbps
(2Mbps)
[3.4GHz]
I I\ GND Q\ Q
FP
LO-PLL
100n
6p8
6p8
180
180
180
180
180
100n
FP
1 LOIN
2 VPS1
3 IOPN
4 IOPP
5 VCMO
6 IAIN
7 COM3
8 IMXO
9 COM2
10 RFIN
11 RFIP
12 VPS2
13 IOFS
14 VREF
28 LOIP
27 COM1
26 QOPN
25 QOPP
24 QAIN
23 COM3
22 QMXO
21 VPS3
20 VDT1
19 VAGC
18 VDT2
17 VGIN
16 QOFS
15 ENBL
AD8347
(180) 120
180p (680p)
4µ7 (33µ)
180p (680p)
(180) 120
Jumper 1/8W
6p8
6p8
RF in
1.25GHz
2.36GHz
[3.41GHz]
-70...+10dBm
180
6n8 (22n)
100n
100n
(180) 120
180p (680p)
4µ7 (33µ)
180p (680p)
(180) 120
4k7
1k
Jumper 1/8W
4k7
3n3 (10n)
1k
4k7
6n8 (22n)
[6n8]
AGC
GND
+3.3V
FP
3V9