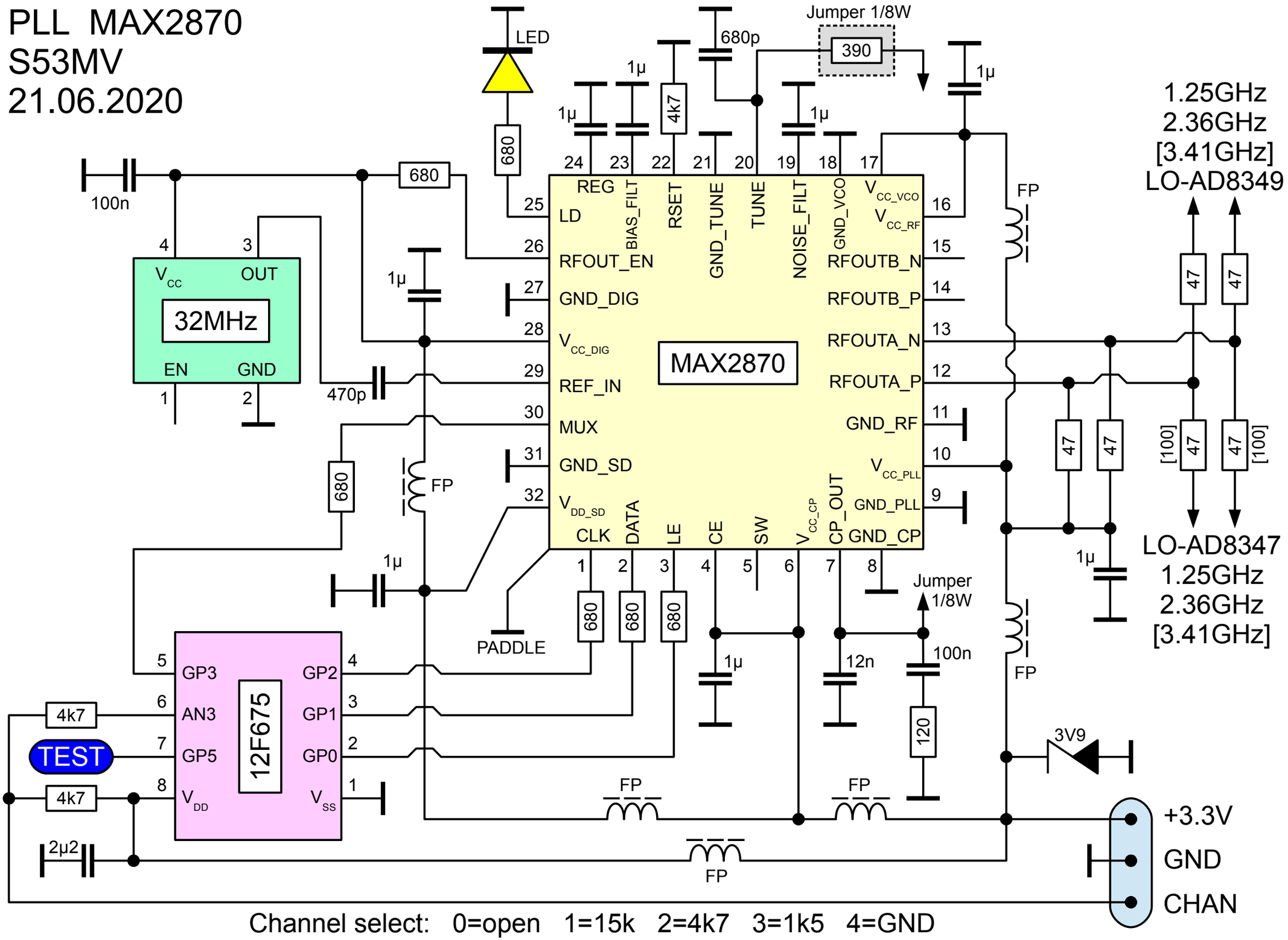
PLL MAX2870
S53MV
21.06.2020
LED
680
680p
Jumper 1/8W
390
1µ
4k7
100n
470p
32MHz
VCC
OUT
EN
GND
MAX2870
REG
LD
RFOUT_EN
GND_DIG
VCC_DIG
REF_IN
MUX
GND_SD
VDD_SD
CLK
DATA
LE
CE
SW
VCC_CP
CP_OUT
GND_CP
GND_PLL
VCC_PLL
GND_RF
RFOUTA_P
RFOUTA_N
RFOUTB_P
RFOUTB_N
VCC_RF
VCC_VCO
GND_VCO
NOISE_FILT
TUNE
GND_TUNE
RSET
BIAS_FILT
PADDLE
FP
47
[100]
1.25GHz
2.36GHz
[3.41GHz]
LO-AD8349
LO-AD8347
1.25GHz
2.36GHz
[3.41GHz]
Jumper
1/8W
12n
120
3V9
12F675
GP3
AN3
GP5
VDD
GP2
GP1
GP0
VSS
TEST
2µ2
+3.3V
GND
CHAN
Channel select: 0=open 1=15k 2=4k7 3=1k5 4=GND